Introduction of Diodes

Outline

- Introduction of Diodes
- Rectifiers

John Ambrose Fleming

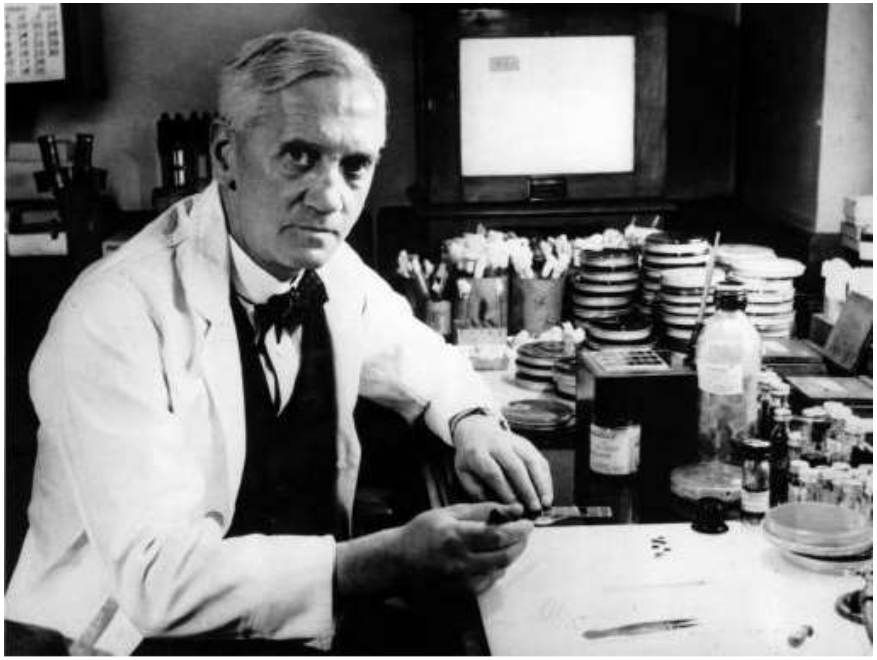

In 1904
Fleming
valve

Electrons and Hole Current

- **Intrinsic semiconductor**
  - Intrinsic (pure) silicon(tetravalent 四价的)
  - Electron current
  - Hole current

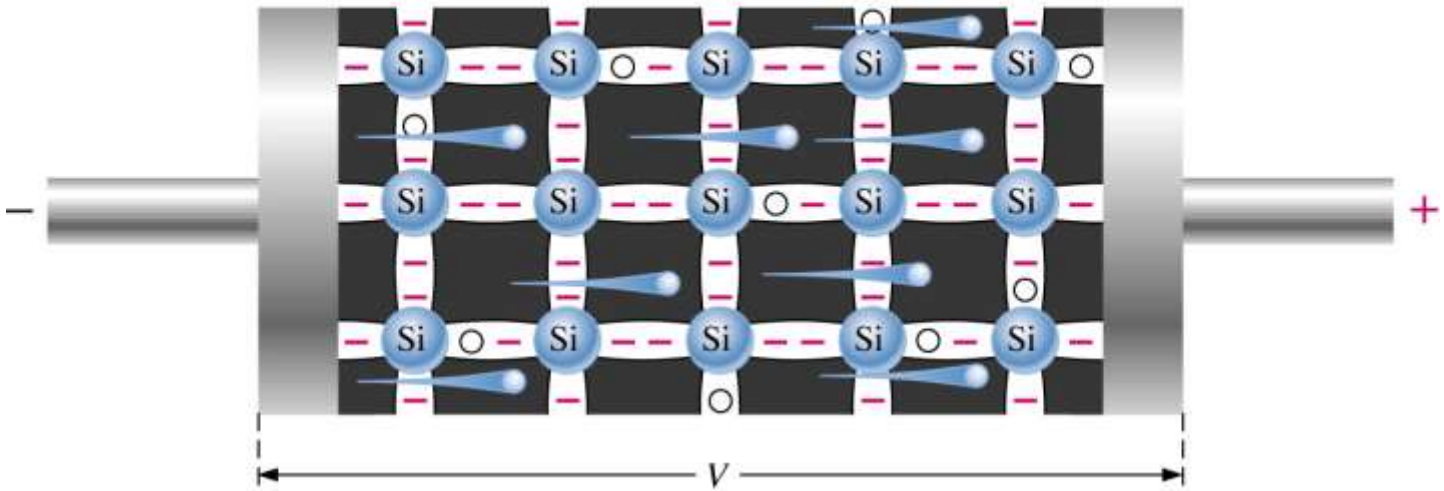

Electron current in pure silicon

The *PN* Junction

- Doping
- The *PN* Junction

Doping

- **Doping**
  - **Controlled addition of impurities to the pure (intrinsic) semiconductive material. The process increases the number of current carriers (electrons or holes).**
- **N-type**
  - **Pentavalent impurity (donors)**
    - ✓ **Arsenic（砷）, phosphorus（磷）, antimony（锑）**
- **P-type**
  - **Trivalent impurity (acceptors)**
    - ✓ **Aluminum（铝）, boron（硼）, gallium（镓）**

Doping

- N-type

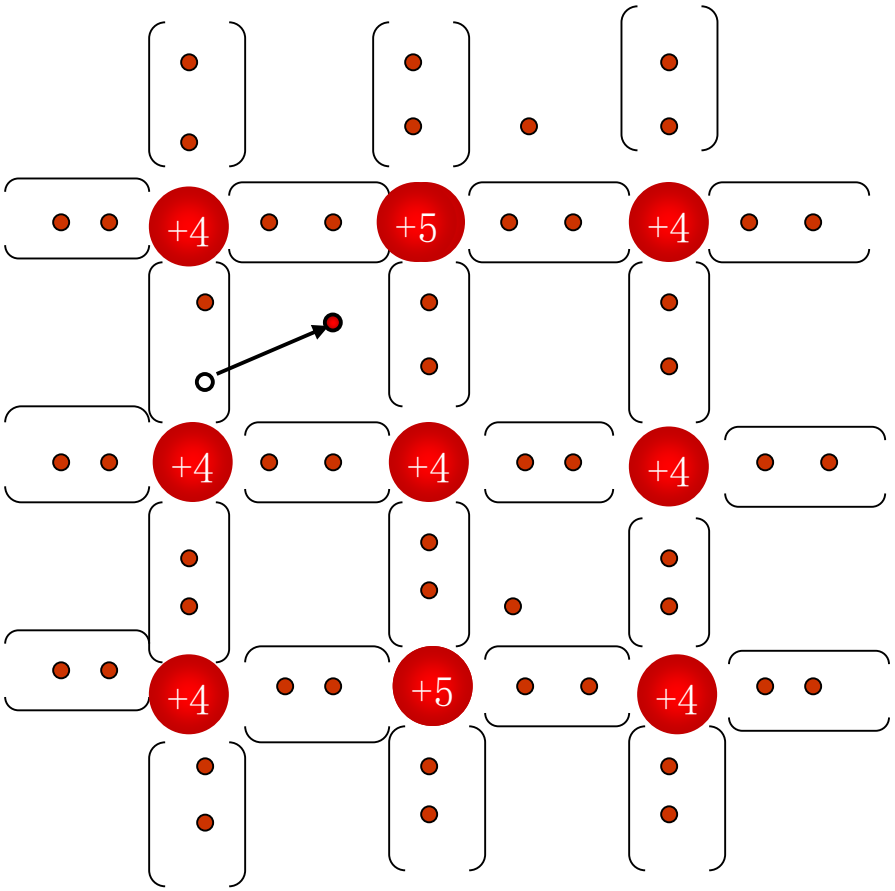

- P-type

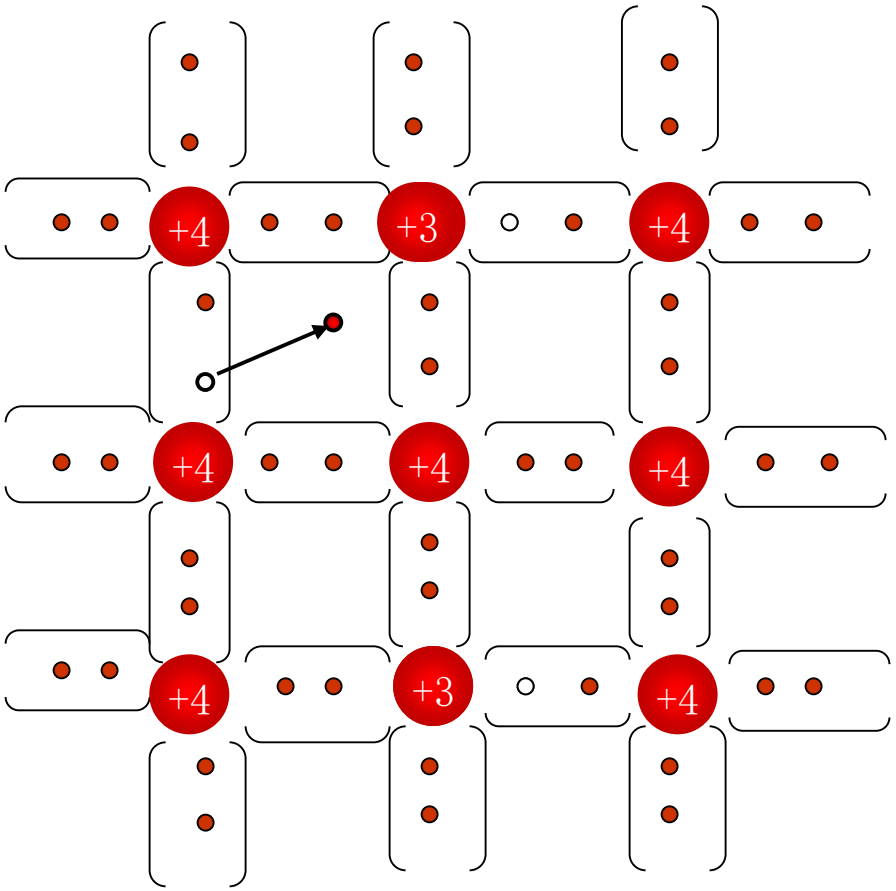

Doping

- **Carrier**
  - **Majority carriers**
    - N-type: electrons
    - P-type: holes
  - **Minority carriers**
    - N-type: holes
    - P-type: electrons

➢ The process of creating n-type or p-type materials retains the overall electrical neutrality.

The *PN* Junction

- ***PN* junction**
  - When a piece of intrinsic silicon is doped so that half is n-type and the other half is p-type, a ***pn* junction** is formed between the two regions.
- **Diode**
  - A simple *pn* junction forms a **semiconductor diode**.
  - A **diode** is a device that allows current in only one direction.

The *PN* Junction

- **Formation of the *pn* junction**

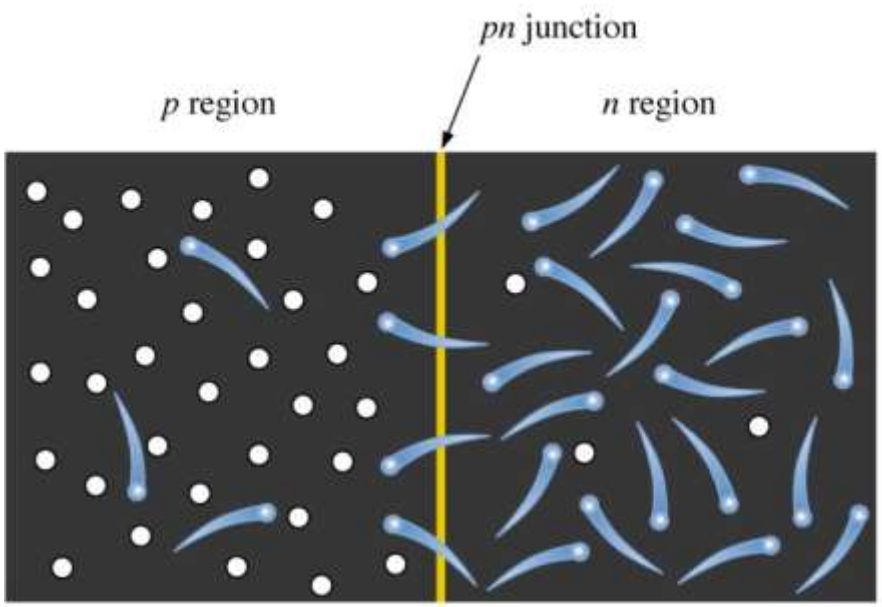

(a) At the instant of junction formation, free electrons in the *n* region near the *pn* junction begin to diffuse across the junction and fall into holes near the junction in the *p* region.

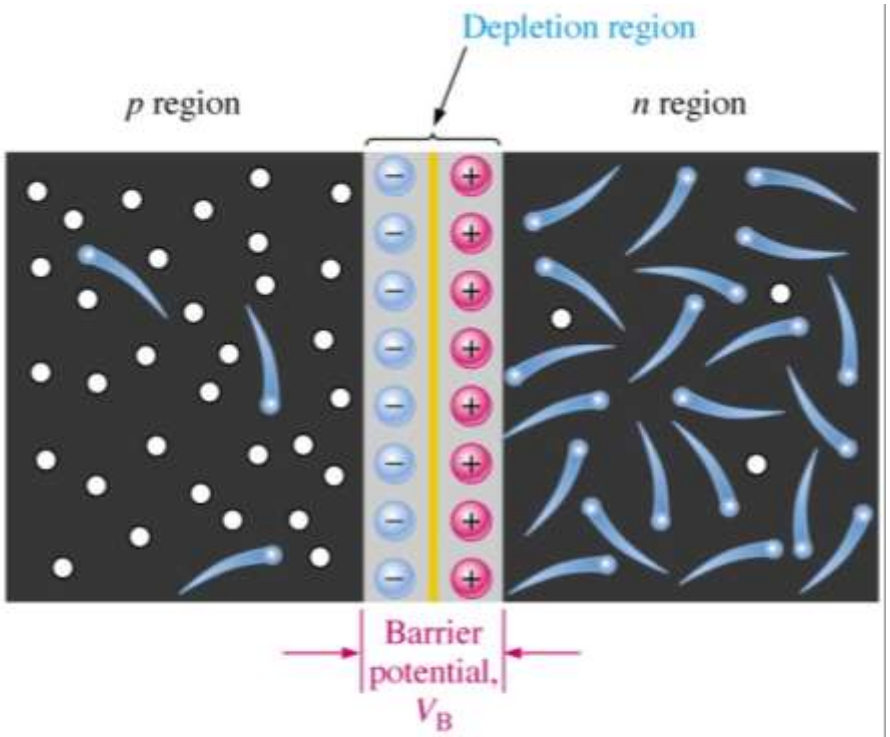

(b) For every electron that diffuses across the junction and combines with a hole, a positive charge is left in the *n* region and a negative charge is created in the *p* region, forming a barrier potential. This action continues until the voltage of the barrier repels further diffusion.

The *PN* Junction

- **The Depletion Region**
  - After the ion layers build up, the area on both sides of the junction becomes essentially depleted of any conduction electrons or holes and is known as **the depletion region**.
- **Barrier Potential (V_B)**
  - The existence of the positive and negative ions on opposite side of the junction creates a **barrier potential** across the depletion region.
  - 0.7V for silicon at room temperature
  - 0.2 - 0.3V for germanium （锗）at room temperature

Biasing the Semiconductor Diode

- **Semiconductor diode**
  - A single *pn* junction forms a semiconductor diode.
- **Forward Bias**
- **Reverse Bias**

Forward Bias

- **Bias**
  - The term bias in electronics refers to a fixed dc voltage that sets the operating conditions for a semiconductor device.
  - Forward bias
  - Reverse bias
- Forward bias
  - Forward bias is the condition that permits current across a *pn* junction.
  - When the semiconductor diode is forward-biased, the anode is the more positive terminal and the cathode is the more negative terminal.

Forward Bias

- **The work process of forward biased diode**

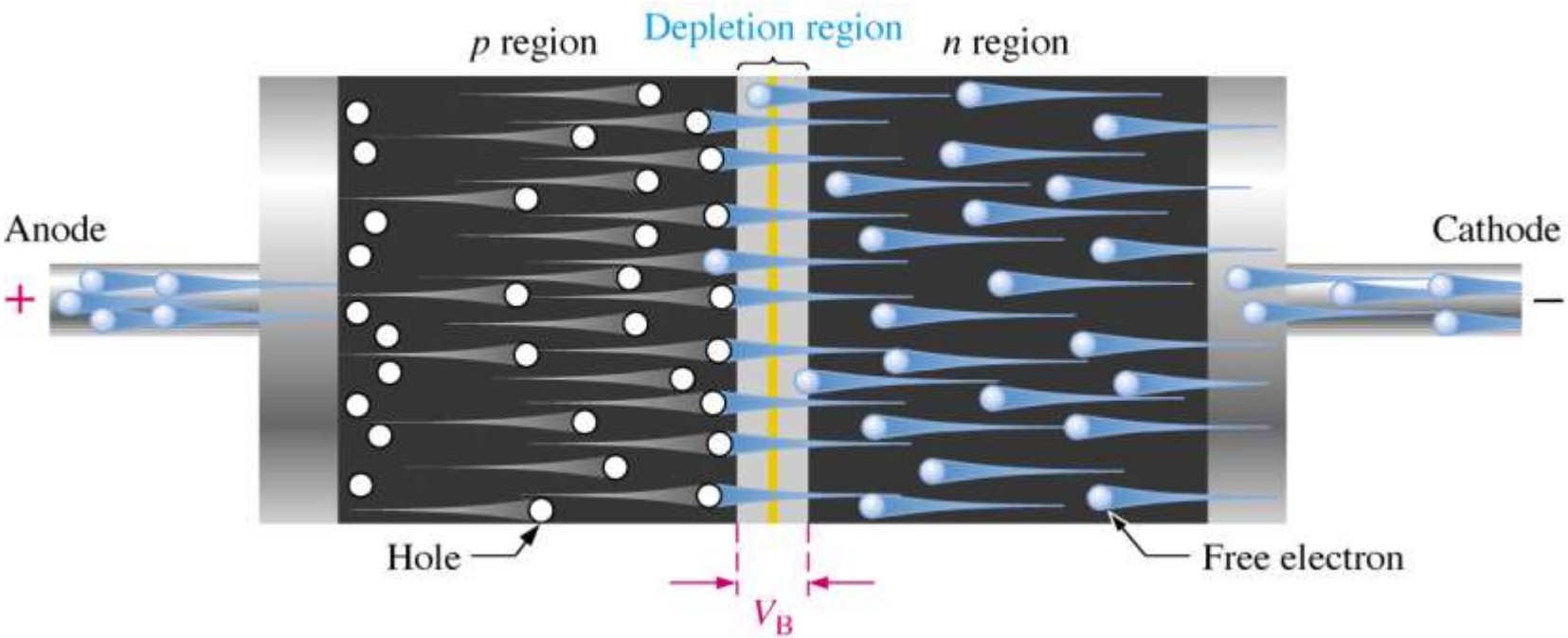

Electrons flow in a forward-biased semiconductor diode

Reverse Bias

- **Reverse bias**
  - Reverse bias is the bias condition that prevents current across the *pn* junction.
  - When the semiconductor diode is reverse-biased, the anode is the more negative terminal and the cathode is the more positive terminal.

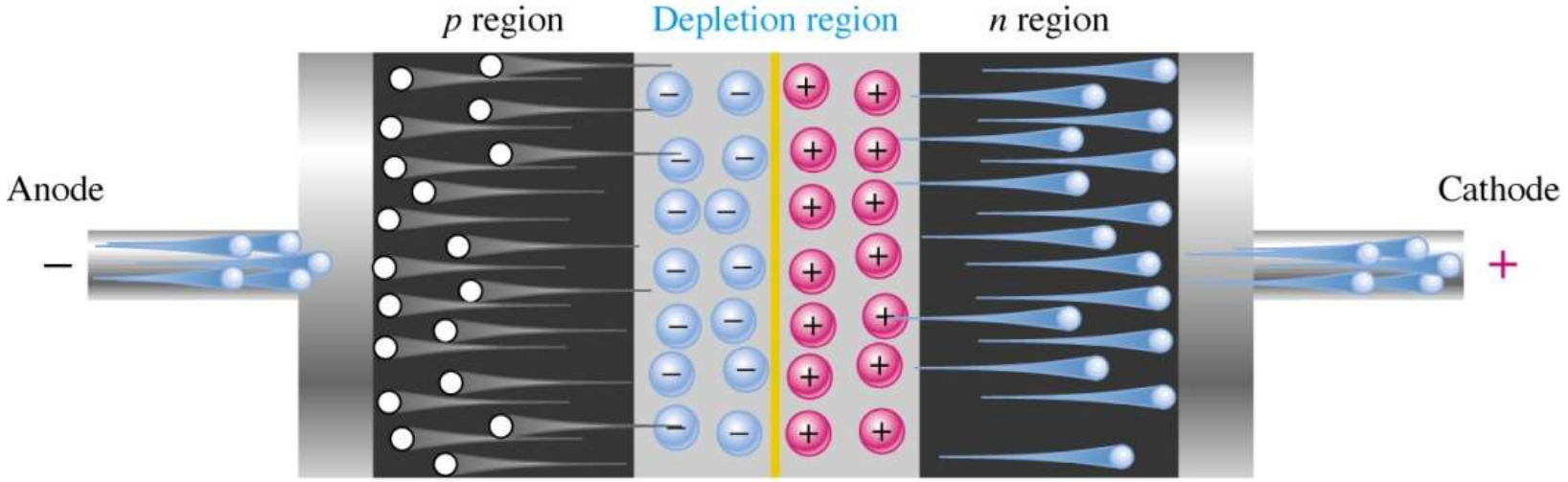

(b) There is transient current as depletion region widens.

Reverse Bias

- **Reverse bias**
  - The depletion region widens until the potential difference across it is equal to the external bias voltage.
  - The depletion region effective acts as an insulator between the layers of oppositely charged ions when the diode is reverse-biased.

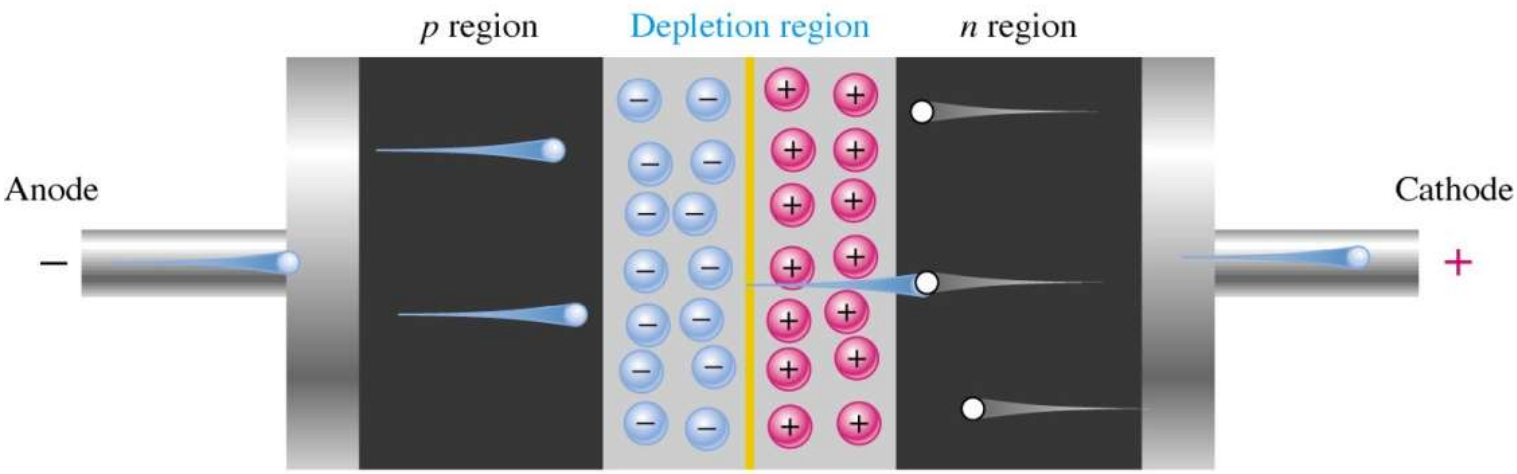

(c) Majority current ceases when barrier potential equals bias voltage. There is an extremely small reverse current due to minority carriers.

Reverse Bias

- **Peak Inverse Voltage (PIV)**
  - The maximum value of reverse voltage for a diode is designed as **peak inverse voltage (PIV)**.
- **Reverse Breakdown**

Avalanche breakdown (avalanche effect)

- Low doping, wide depletion region

Zener diode — designed to reverse breakdown

- High doping, narrow depletion region

Diode Symbol

- Schematic symbol
  - **Anode (A)** and **Cathode (K)**
- Forward bias
- Reverse bias

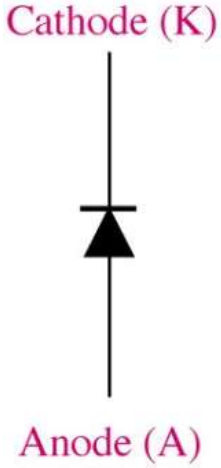

(a) Diode symbol

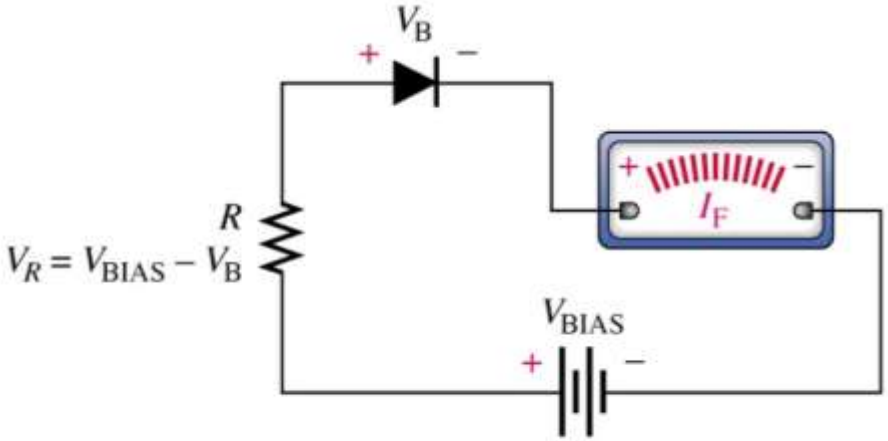

(b) Forward bias

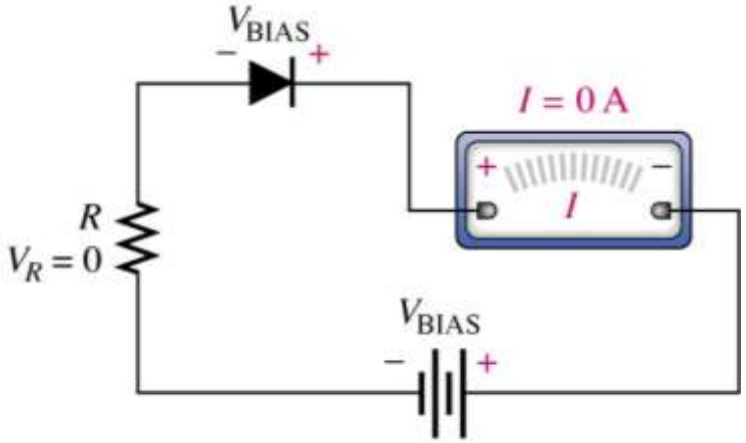

(c) Reverse bias

Diode Characteristic Curve

- **Diode *IV* curve**
  - $i = I_S(e^{\frac{qu}{kT}} - 1)$

    $= I_S(e^{\frac{u}{U_T}} - 1)$

    $\approx I_S \cdot e^{\frac{u}{U_T}}$

    Where $U_T \approx 26mV$,

    While $T = 300K$
- **Diode drop**
  - 0.7V (for silicon)
  - 0.2V (for germanium)

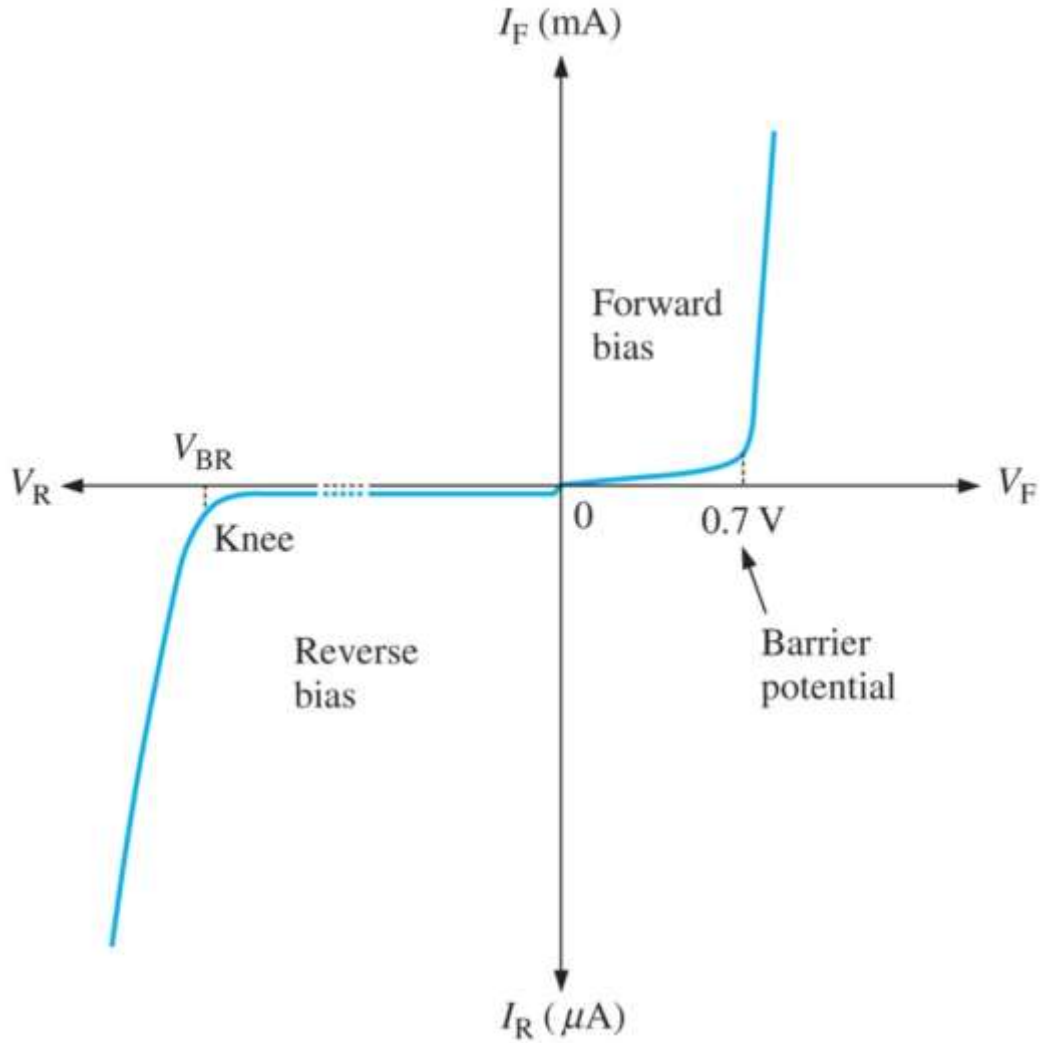

Diode Characteristic Curve

- Plotting the Characteristic Curve on an Oscilloscope

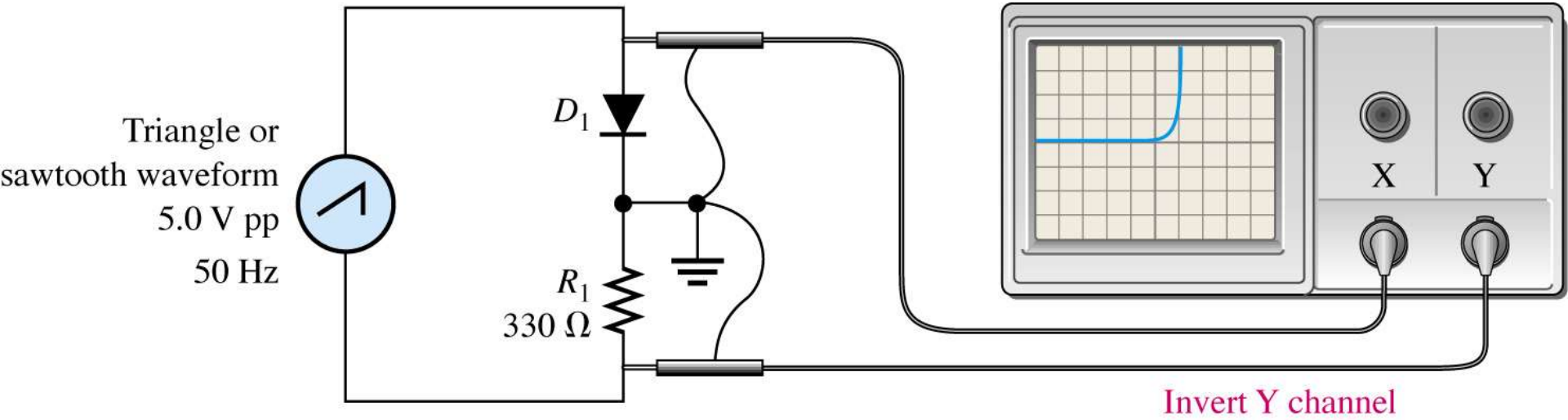

Plotting the *IV* characteristic curve for a diode on an oscilloscope.
The oscilloscope is placed in the X-Y mode and the Y channel is inverted.

Diode Parameters

- **Absolute Maximum Ratings**
  - Forward current (I_F)
  - Repetitive peak reverse voltage (V_{RRM})
  - Reverse voltage (U_R)
- **Electrical Characteristics**
  - Reverse current (I_R)
  - Diode Capacitance (C_D)
    - Barrier capacitance (C_b)
    - Diffusion capacitance (C_d)

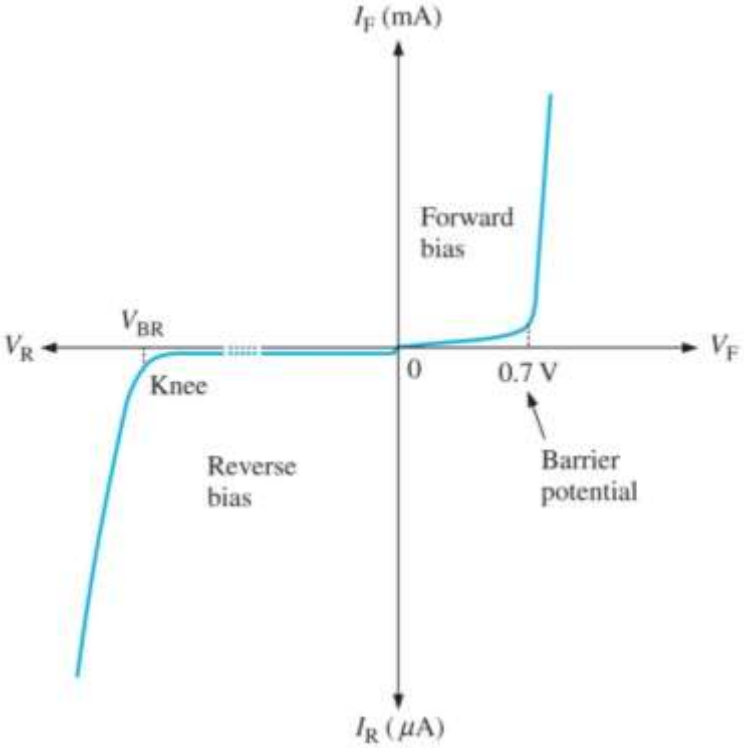

[Datasheet of a Actual Diode]

The Diode Offset Model

- **Ideal model of a diode as a switch**

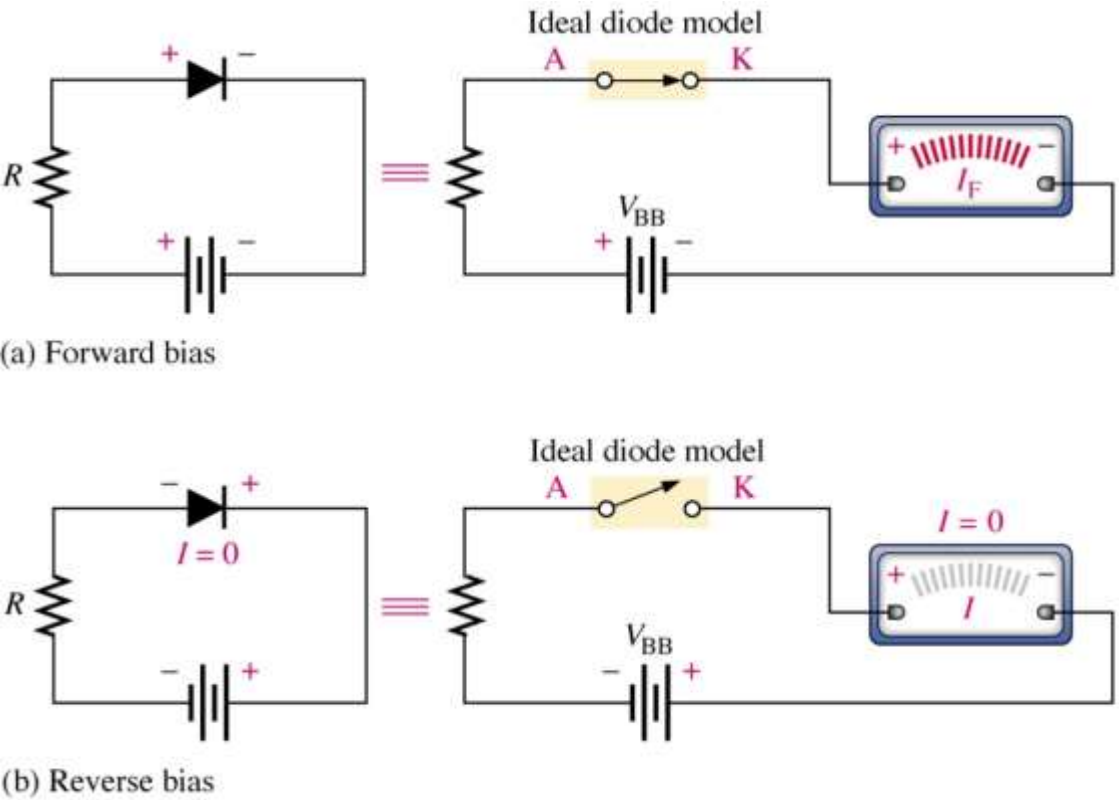

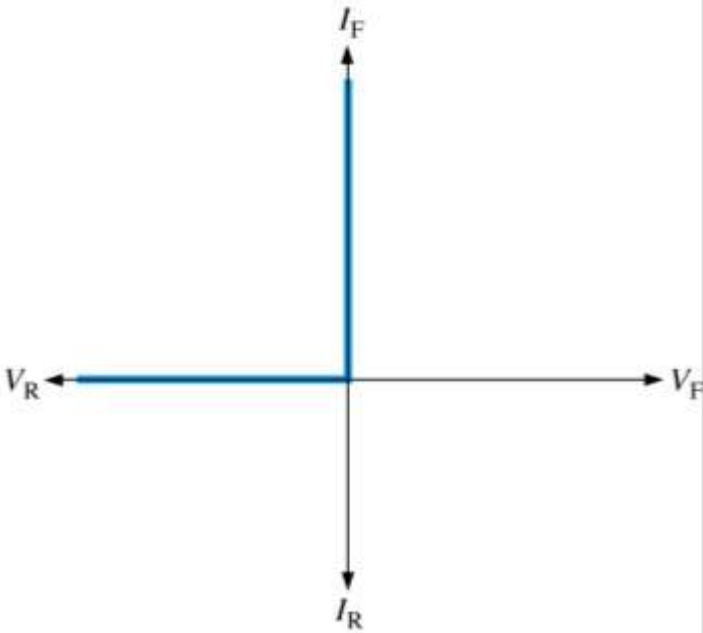

(c) Ideal characteristic curve (blue)

Types of Diodes

- **Rectifier Diode**
- **Signal Diode**
- **Detector diode**
- **Zener Diode**
- **Light-Emitting Diode (LED)**
- **Photodiode**
- **Varactor Diode**
- **Schottky Diode**

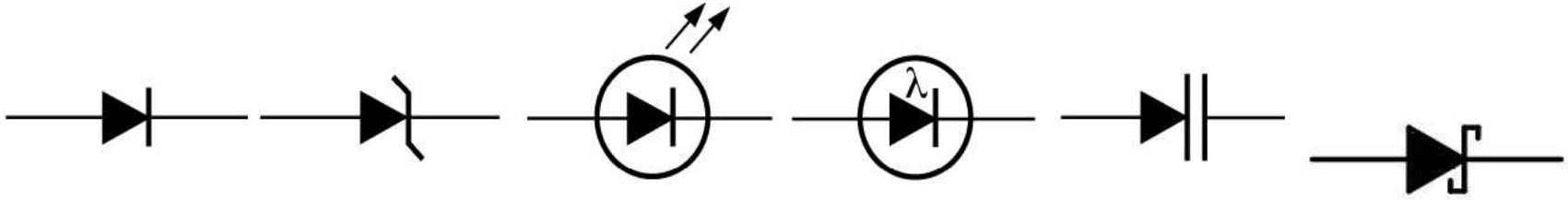

(a) Rectifier or signal (b) Zener (c) LED (d) Photodiode (e) Varactor (f) Schottky

Rectifier Circuit

Three elements of a Power Supply:

AC → Rectifier circuit → pulsating DC → Filter → ripple DC → Regulator → usable DC

- Half-Wave Rectifiers
- Full-Wave Rectifiers
- Bridge Rectifiers

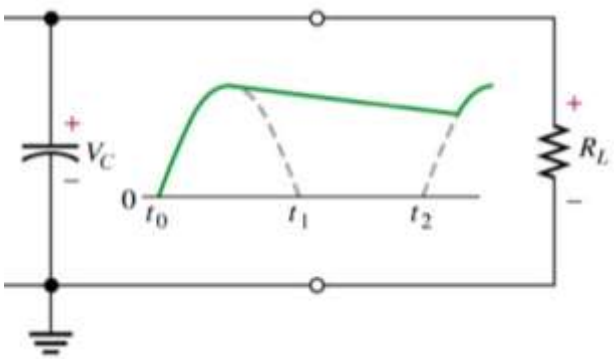

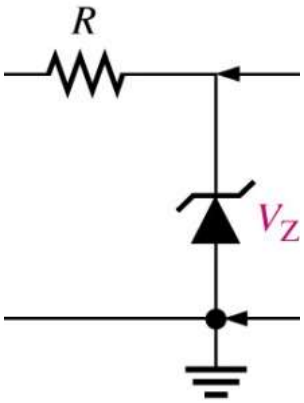

Half-Wave Rectifier

- **Half-wave rectifier**

$$V_{p(out)} = V_{p(in)} - 0.7\text{V}$$

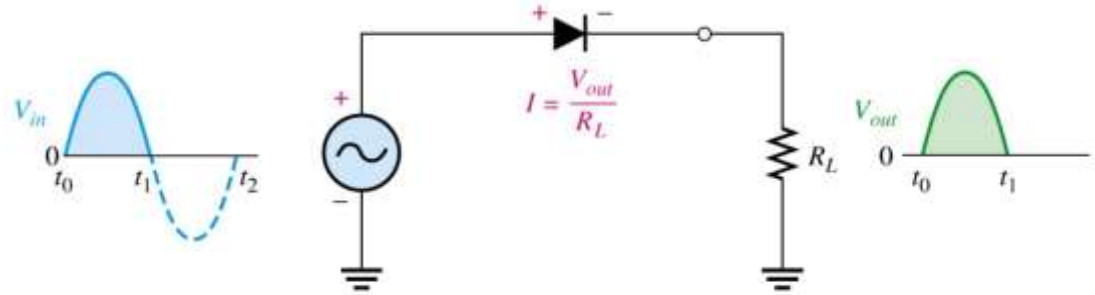

(a) Operation during positive alternation of the input voltage, diode conducts.

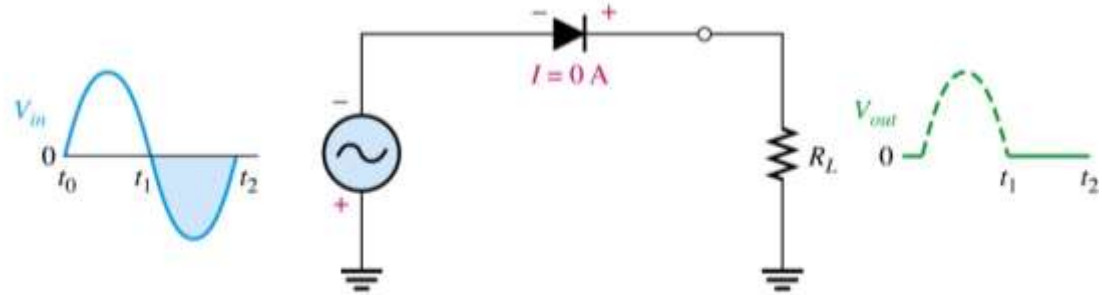

(b) Operation during negative alternation of the input voltage. Diode does not conduct; therefore, the output voltage is zero.

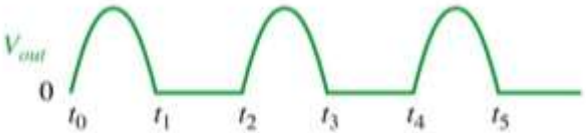

(c) Half-wave output voltage for three input cycles

Example 2-1

Problem

Determine the peak output voltage and the peak inverse voltage (PIV) of the rectifier in Figure 2–16 for the indicated input voltage. Sketch the waveforms you should observe across the diode and the load resistor.

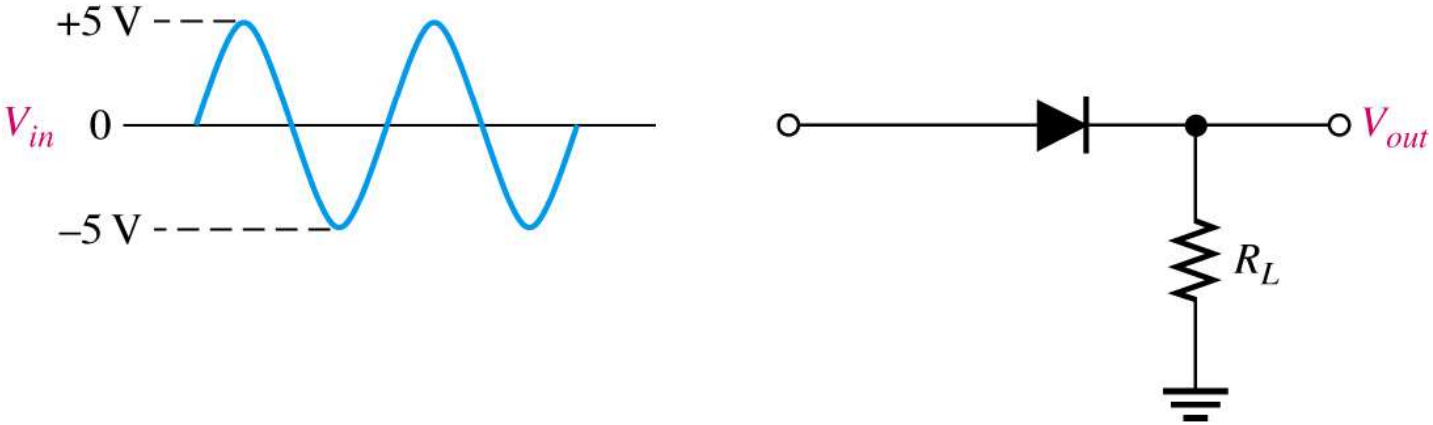

FIGURE 2–16

Example 2-1

Solution

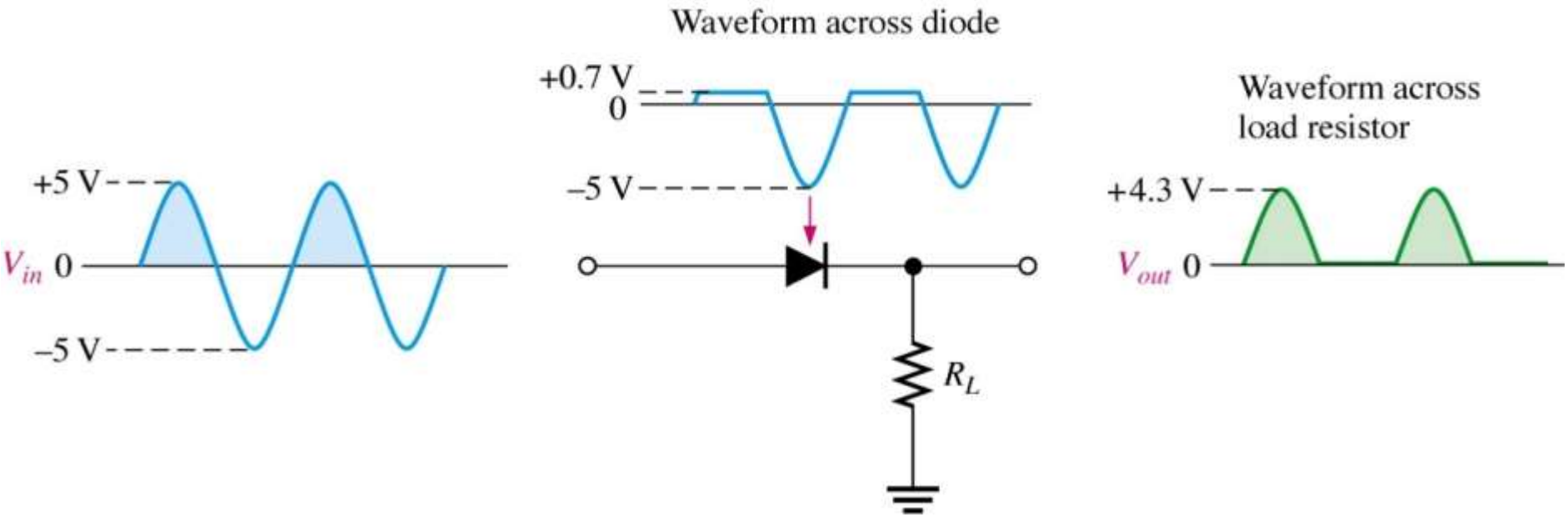

Full-Wave Rectifier

- **Full-wave rectifier**
  - **A full-wave rectifier allows unidirectional current to the load during the entire input cycle.**
  - **The dc output voltage pulsates every half-cycle of the input.**
- **Center-tapped (CT) full-wave rectifier**

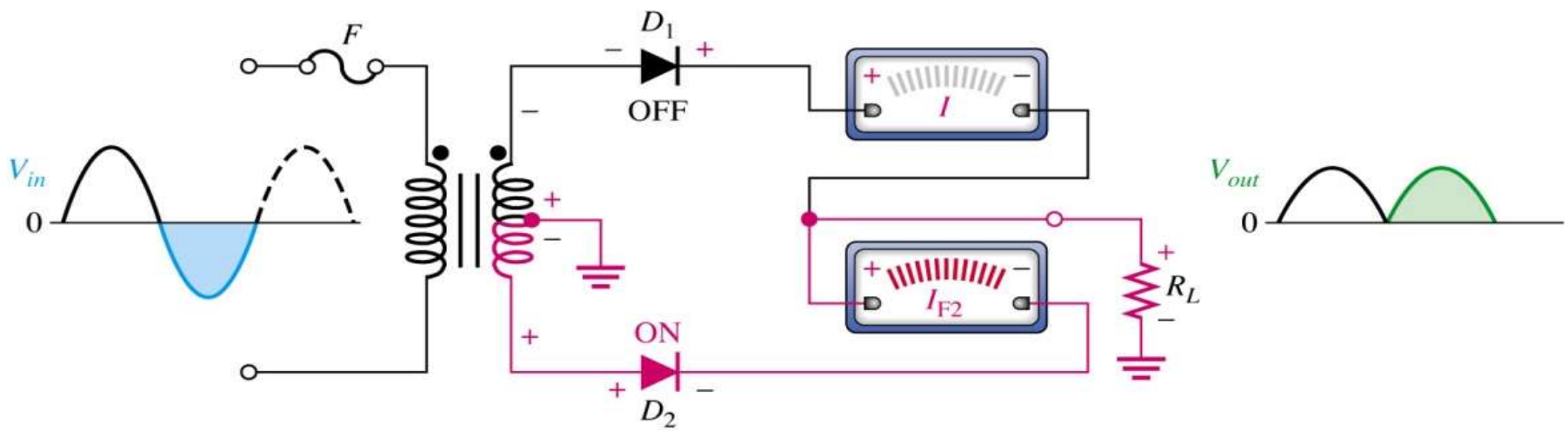

(b) During negative half-cycles, D_2 is forward-biased and D_1 is reverse-biased.

Full-Wave Rectifier

- **Effect of the Turns Ratio on the Full-wave Output Voltage**
  - **In order to obtain a peak output voltage equal to the peak input voltage, a step-up transformer with a turn ratio of 2 (1:2) must be used.**
- **Peak Inverse Voltage (PIV)**
  - **The maximum reverse voltage that each diode must withstand is the peak value of the total secondary voltage (V_{sec}).**
  - **The Peak inverse voltage across either diode in the center-tapped full-wave rectifier: $\mathbf{PIV = 2V_{p(out)}}$**

Example 2-2

Problem

(a) Show the voltage waveforms across the secondary winding and across R_L when a 25 V peak sine wave is applied to the primary winding in Figure 2–20.

(b) What minimum PIV rating must the diodes have?

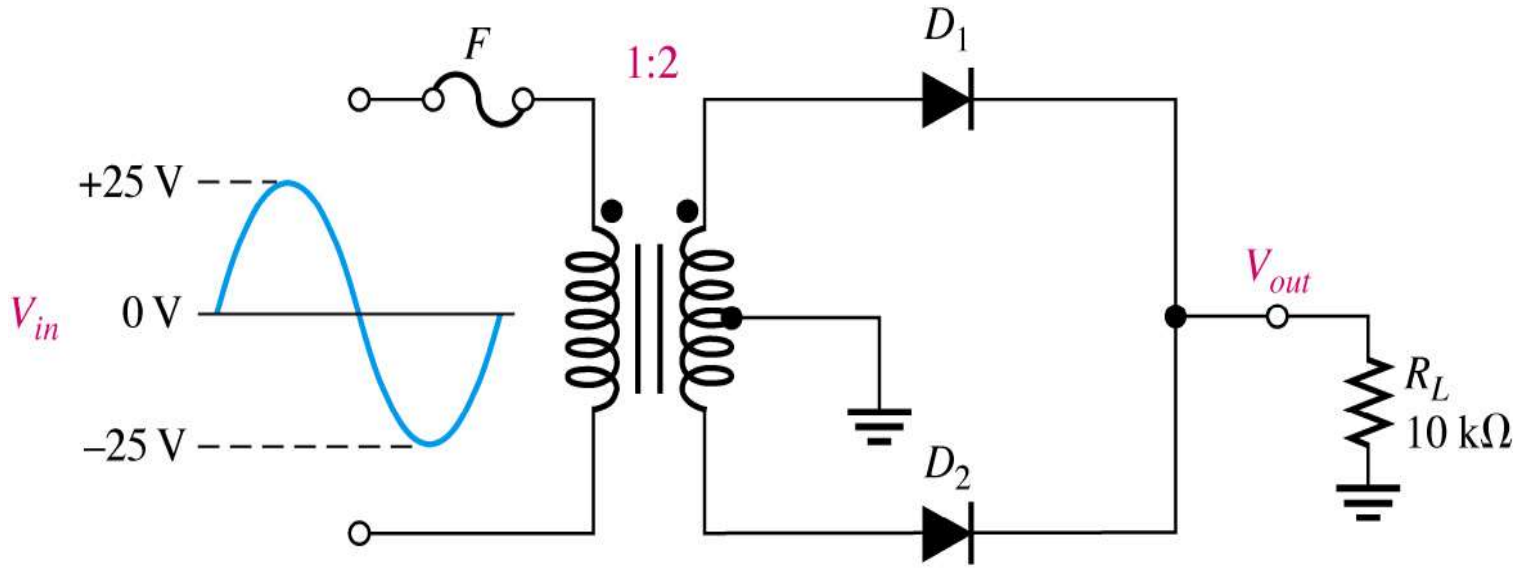

FIGURE 2–20

Example 2-2

Solution

(a) The waveforms are shown in Figure 2–21.

(b) The total peak secondary voltage is

$$V_{p(sec)} = \left(\frac{N_{sec}}{N_{pri}}\right) V_{p(in)} = 2(25)\text{ V} = 50\text{ V}$$

There is a 25 V peak across each half of the secondary. Using the ideal model, one diode is a short while the other diode has the full secondary voltage across it. Each diode must have a minimum PIV rating of **50 V.**

Bridge Rectifier

- **Bridge Rectifier**
  - **Does not require a center-tapped transformer.**
  - **The four diodes are available in a single package.**

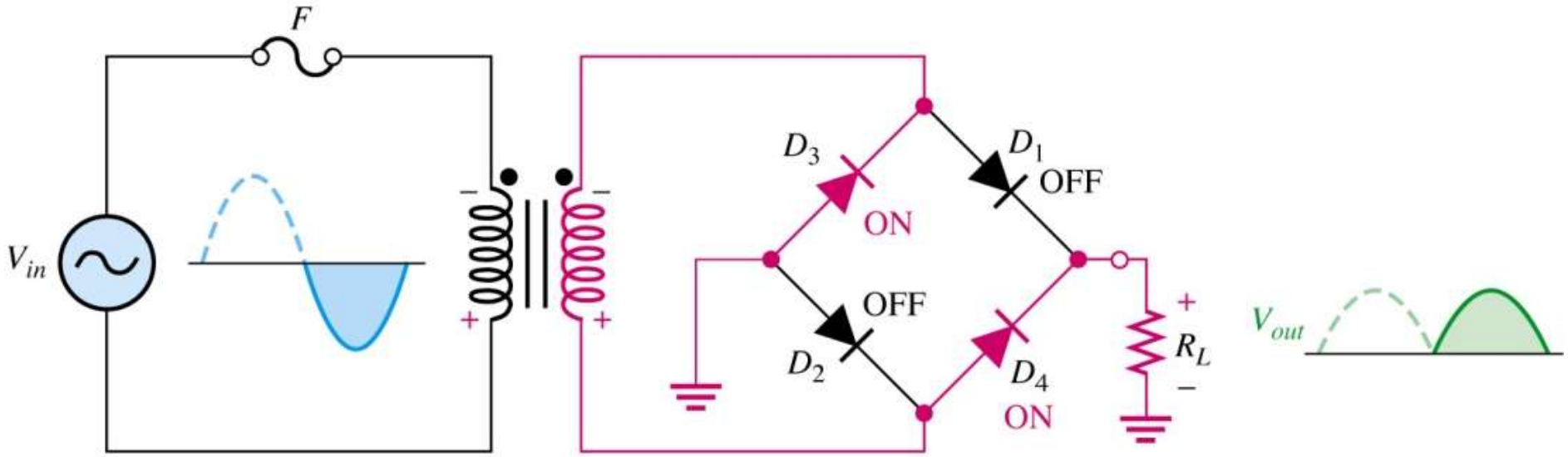

(b) During negative half-cycle of the input, D_3 and D_4 are forward-biased and conduct current. D_1 and D_2 are reverse-biased.

Bridge Rectifier

- Bridge Output Voltage
  - Neglecting the diode drops, $V_{p(out)} = V_{sec}$
  - Actually, $V_{p(out)} = V_{sec} - 1.4\text{V}$

➢ Peak Inverse Voltage

- PIV $= V_{p(out)}$

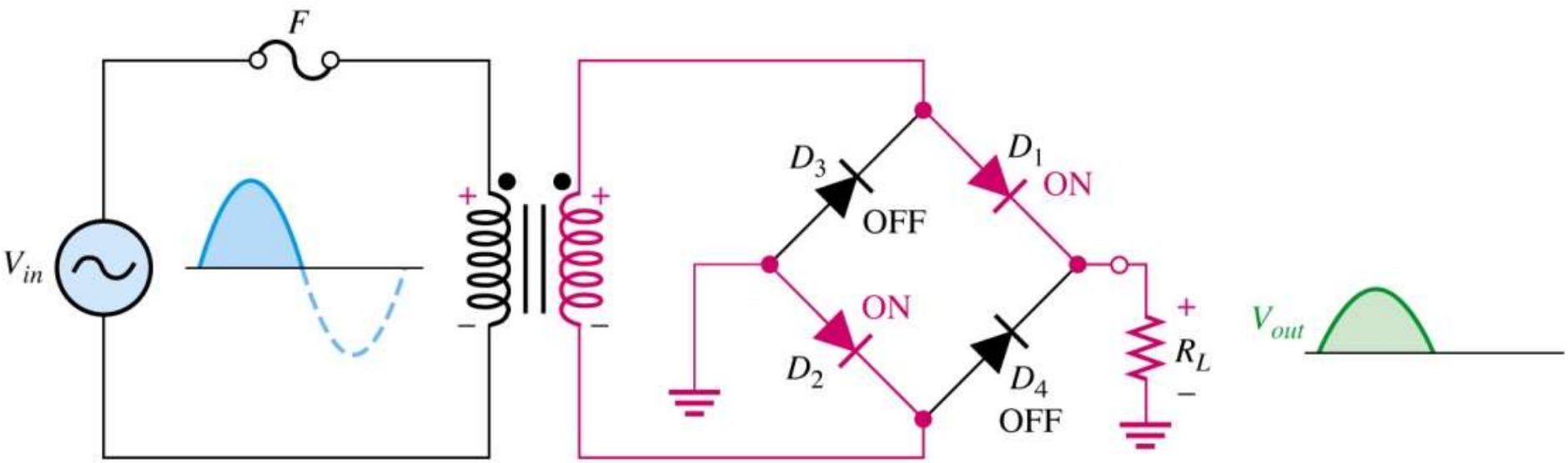

Power Supply Filters and Regulators

The function of a power supply is to convert the standard power frequency ac power line voltage to nearly constant dc.

- Capacitor-Input Filter
- Zener Regulators
- IC Regulators
- Percent Regulation

Capacitor-Input Filter

- Capacitor-input filter is the least expensive and most widely used power supply filter

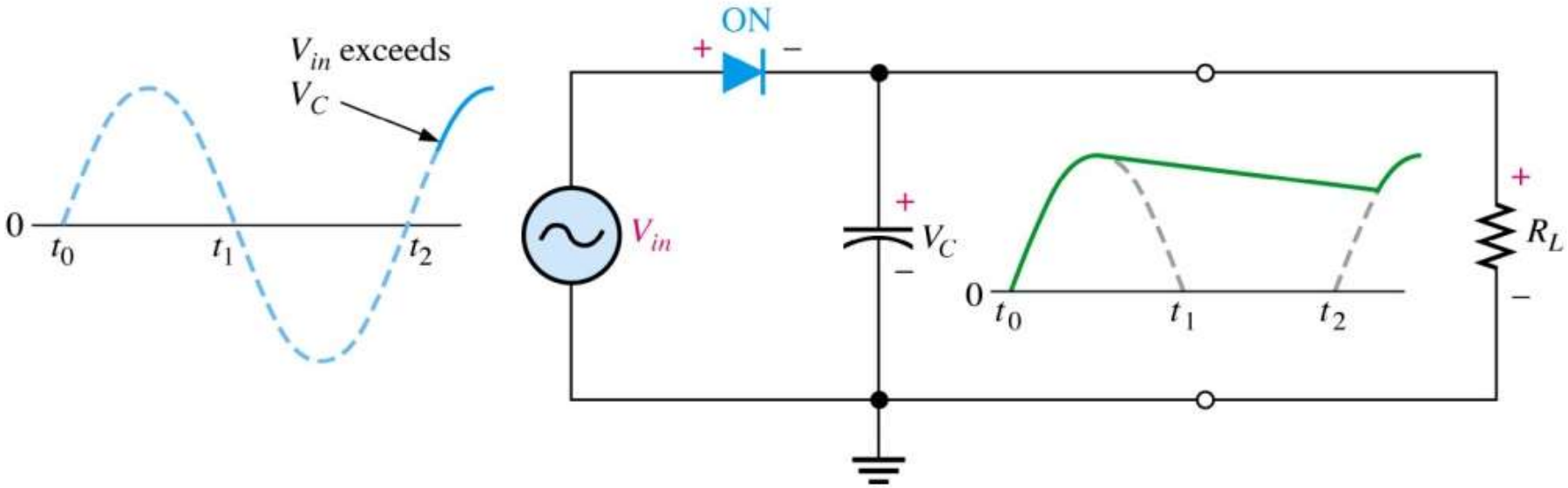

(c) The capacitor charges back to peak of input when the diode becomes forward-biased. This charging occurs during the portion of the input voltage indicated by the solid blue curve. Notice that the diode is not forward-biased on the second cycle until the capacitor voltage is overcome.

Capacitor-Input Filter

- Ripple Voltage
  - The variation in the capacitor voltage due to the charging and discharging is called **ripple voltage**.
  - When filtered, the full-wave rectified voltage has less ripple voltage than does a half-wave voltage for the same load resistance and filter capacitor va

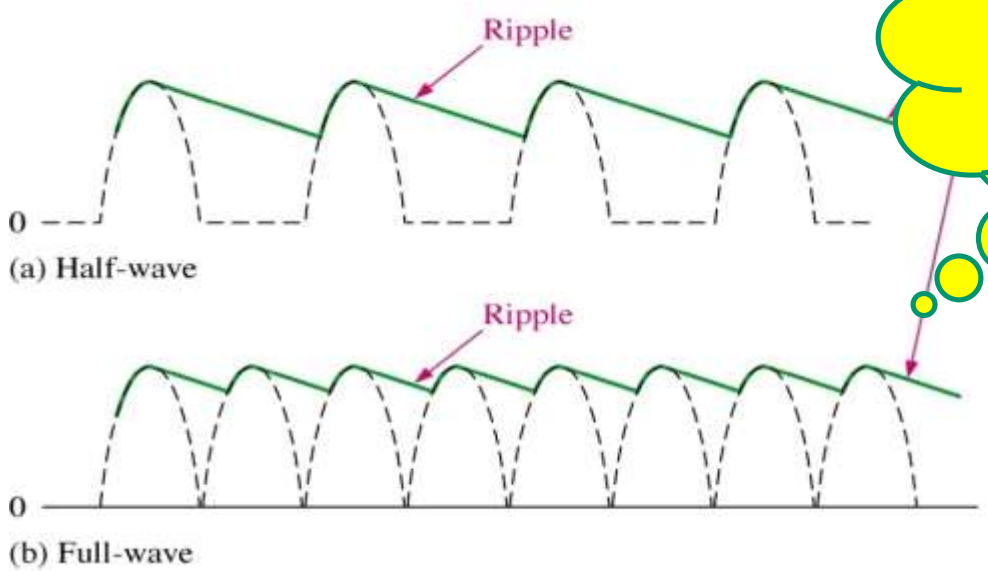

How to calculate the value of the filter capacitor?

Zener Regulators

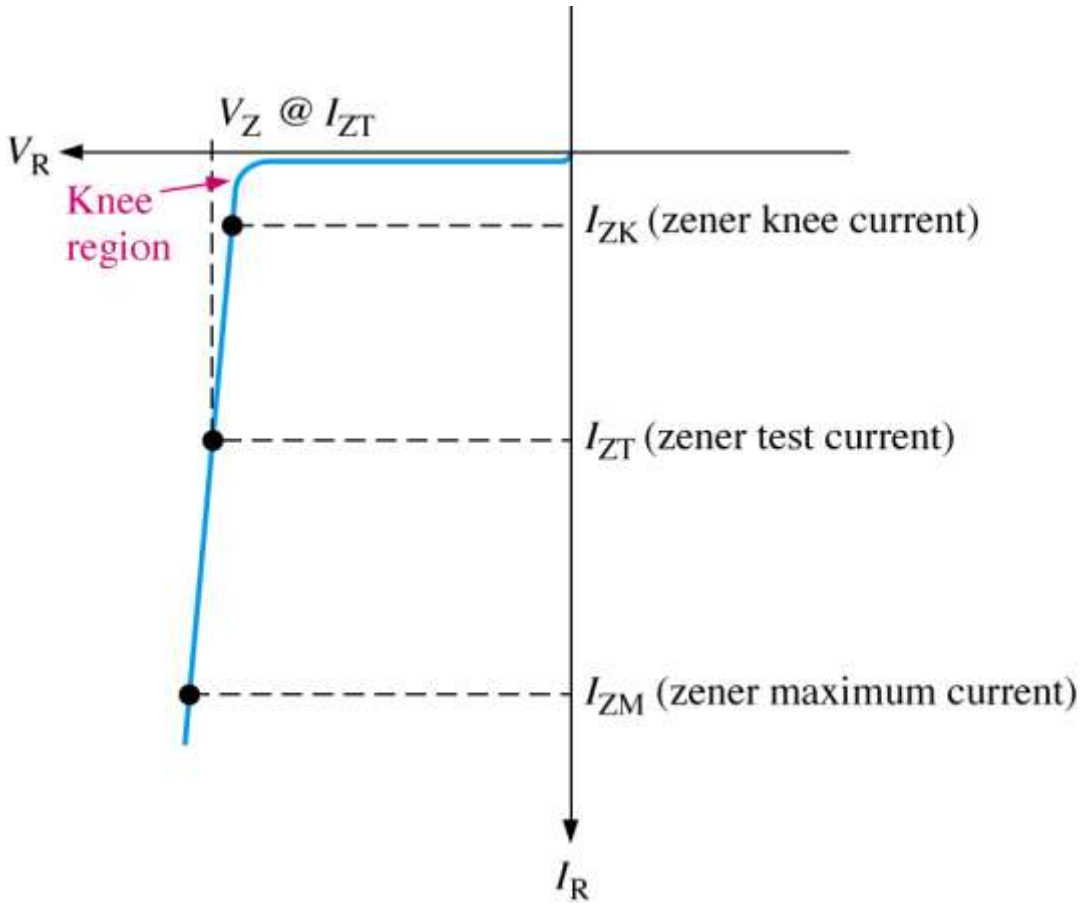

- Zener Regulator
  - A **zener regulator** is a special-purpose diode designed to conduct in the reverse direction.
  - Precise breakdown voltage, controlled at the time of manufacture.

Zener Regulators

- Voltage Regulation
  - Regulate a varying dc input voltage to keep a constant level.

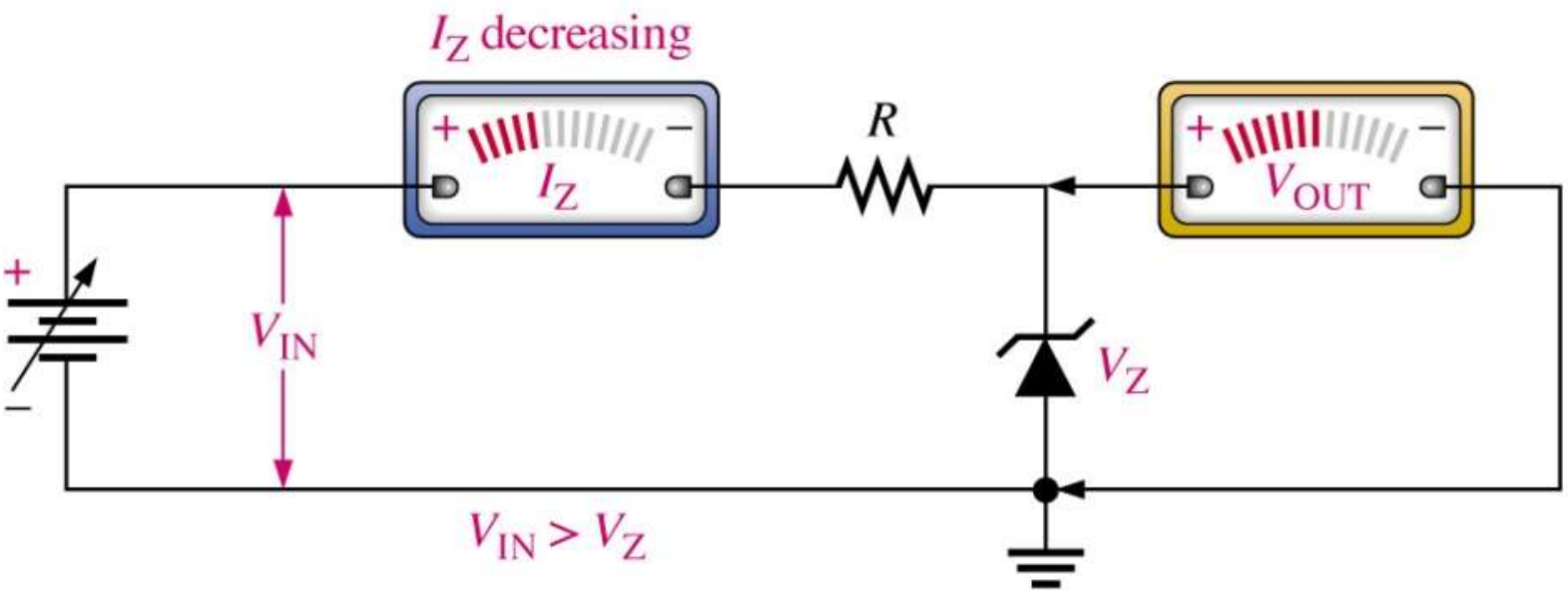

(b) As the input voltage decreases, the output voltage remains constant ($I_{ZK} < I_Z < I_{ZM}$).

Example 2-3

Problem

Figure 2-27 shows a zener diode regulator designed to hold 10 V at the output. Assume the zener current ranges from 4 mA minimum (I_{ZK}) to 40 mA maximum (I_{ZM}). What are the minimum and maximum input voltages for these currents?

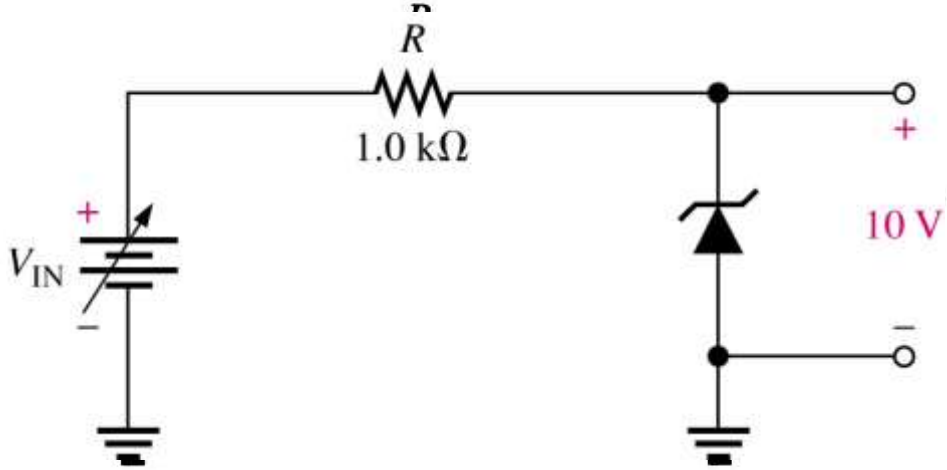

FIGURE 2–27

Solution

For $I_{ZK\ min}$,

$$V_R = I_{ZK\ min} R = 4\text{mA} \times 1.0\text{k}\Omega = 4\text{V}$$

$$V_{IN} = V_R + V_Z = 4 + 10 = 14\text{V}$$

For $I_{ZK\ max}$,

$$V_R = I_{ZK\ max} R = 40\text{mA} \times 1.0\text{k}\Omega = 40\text{V}$$

$$V_{IN} = V_R + V_Z = 40 + 10 = 50\text{V}$$

IC Regulators

- The most effective way to remove ripple is a combination of a capacitor-input filter used with an IC regulator.
- Fixed three-terminal regulator: 78XX and 79XX series

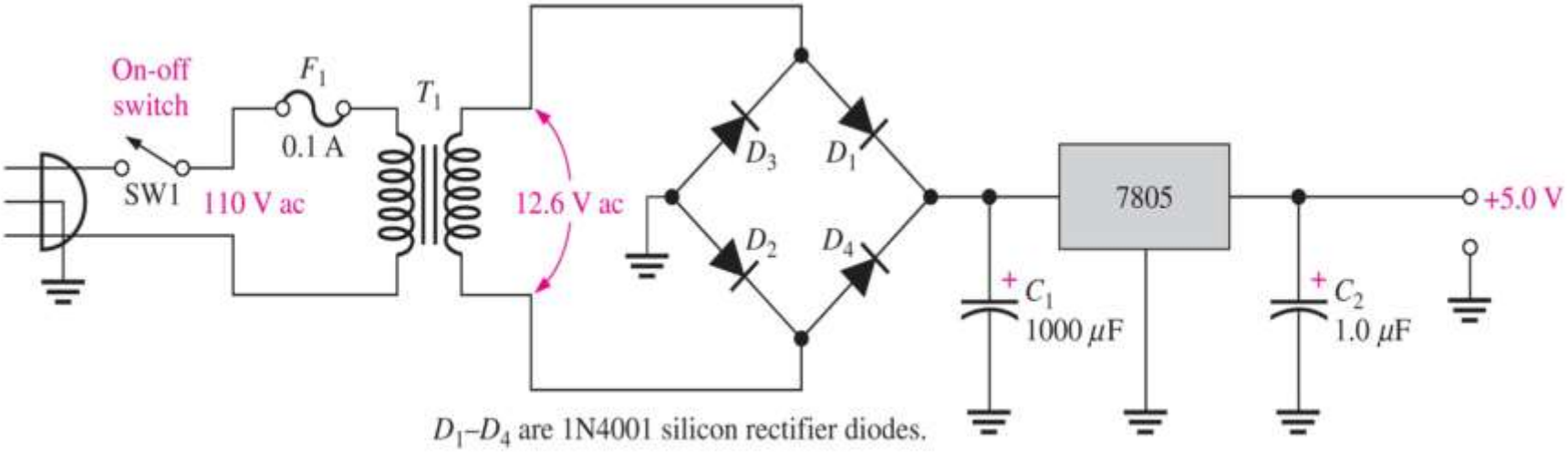

A basic +5.0V power supply using the 7805 regulator

IC Regulators

- Adjustable three-terminal regulator: LM317 and LM337

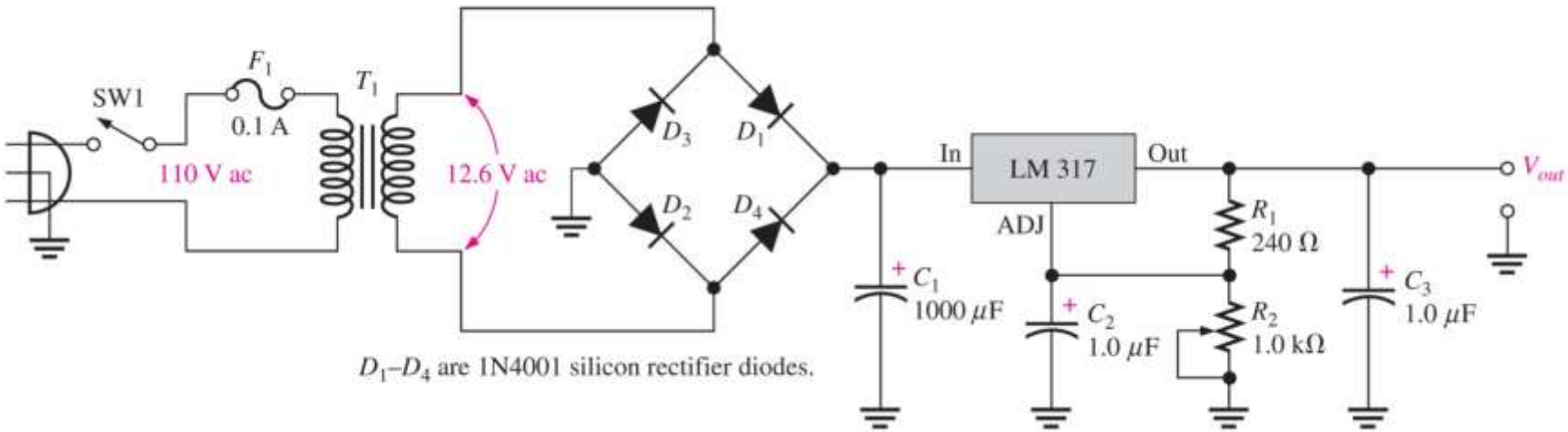

A basic power supply with a variable output voltage (from 1.25 V to 6.5 V).

$$V_{out} = 1.25V\left(\frac{R_1 + R_2}{R_1}\right)$$

Percent Regulation

- Percent regulation
  - The regulation expressed as a percentage is a figure of merit used to specify the performance of any voltage regulator.
  - Line regulation
    - How much change occurs in the output voltage for a given change in the input voltage.
    - $\boldsymbol{Line\ regulation} = \left(\frac{\Delta V_{\mathrm{OUT}}}{\Delta V_{\mathrm{IN}}}\right) \mathbf{100\%}$
  - Load regulation
    - How much change occurs in the output voltage over a certain change of load current values.
    - $\boldsymbol{Load\ regulation} = \left(\frac{V_{\mathrm{NL}} - V_{\mathrm{FL}}}{V_{\mathrm{FL}}}\right) \mathbf{100\%}$

Example 2-4

Problem

Assume a certain 7805 regulator has a measured no-load output voltage of 5.185 V and a full-load output of 5.152 V. What is the load regulation expressed as a percentage? Is this within the manufacturer's specification?

Solution

$$\text{Load regulation} = \left(\frac{V_{NL} - V_{FL}}{V_{FL}}\right)100\% = \left(\frac{5.185\text{ V} - 5.152\text{ V}}{5.152\text{ V}}\right)100\% = \mathbf{0.64\%}$$

The data sheet indicates a maximum variation of the output voltage (with a load current from 5 mA to 1.0 A) of 100 mV. This represents a maximum load regulation of 2% (typical is 0.4%). The measured percent regulation is within specifications.

Question

If the no-load output voltage of a regulator is 24.8 V and the full-load output is 23.9 V, what is the load regulation expressed as a percentage?

Troubleshooting a Power Supply

- A Troubleshooting Plan
- Power Supply Failures
- Troubleshooting a Regulated Power Supply

A Troubleshooting Plan

- Step1
  - Ask questions of the person reporting the trouble
- Step2
  - Power check
- Step3
  - Sensory check
- Step4
  - Isolate the failure

Power Supply Failures

- Component failures ↔ Symptoms
  - Open Fuse or Circuit Breaker
  - Open Diode
  - Shorted Diode
  - Shorted or Leaky Filter Capacitor

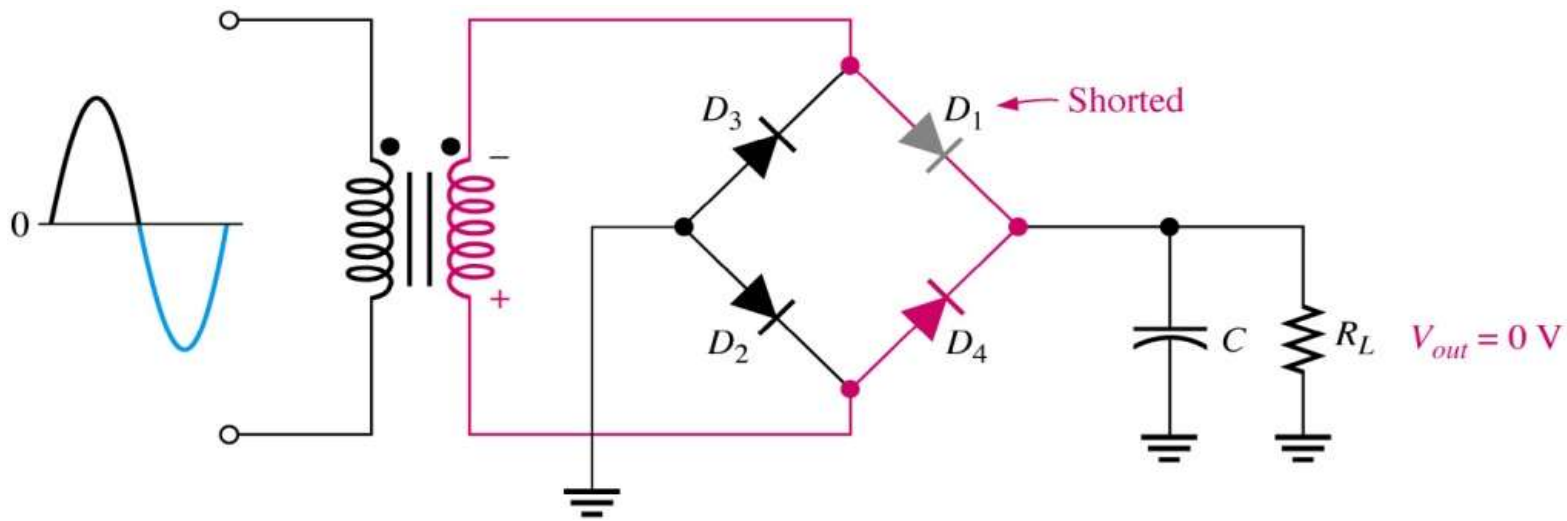

(b) Negative half-cycle: The shorted diode places forward-biased D_4 across the secondary. As a result D_1, D_4, or the transformer secondary will probably burn open, or a fuse (not shown) will open.

Key Objectives

1. Discuss the basic atomic structure of semiconductors
2. Describe the characteristics of an *pn* junction
3. Explain how to bias a semiconductor diode
4. Describe the diode IV characteristic curve
5. Analyze the operation of three basic rectifier circuits
6. Describe the function of power supply filters and regulators
7. Discuss steps in troubleshooting a power supply